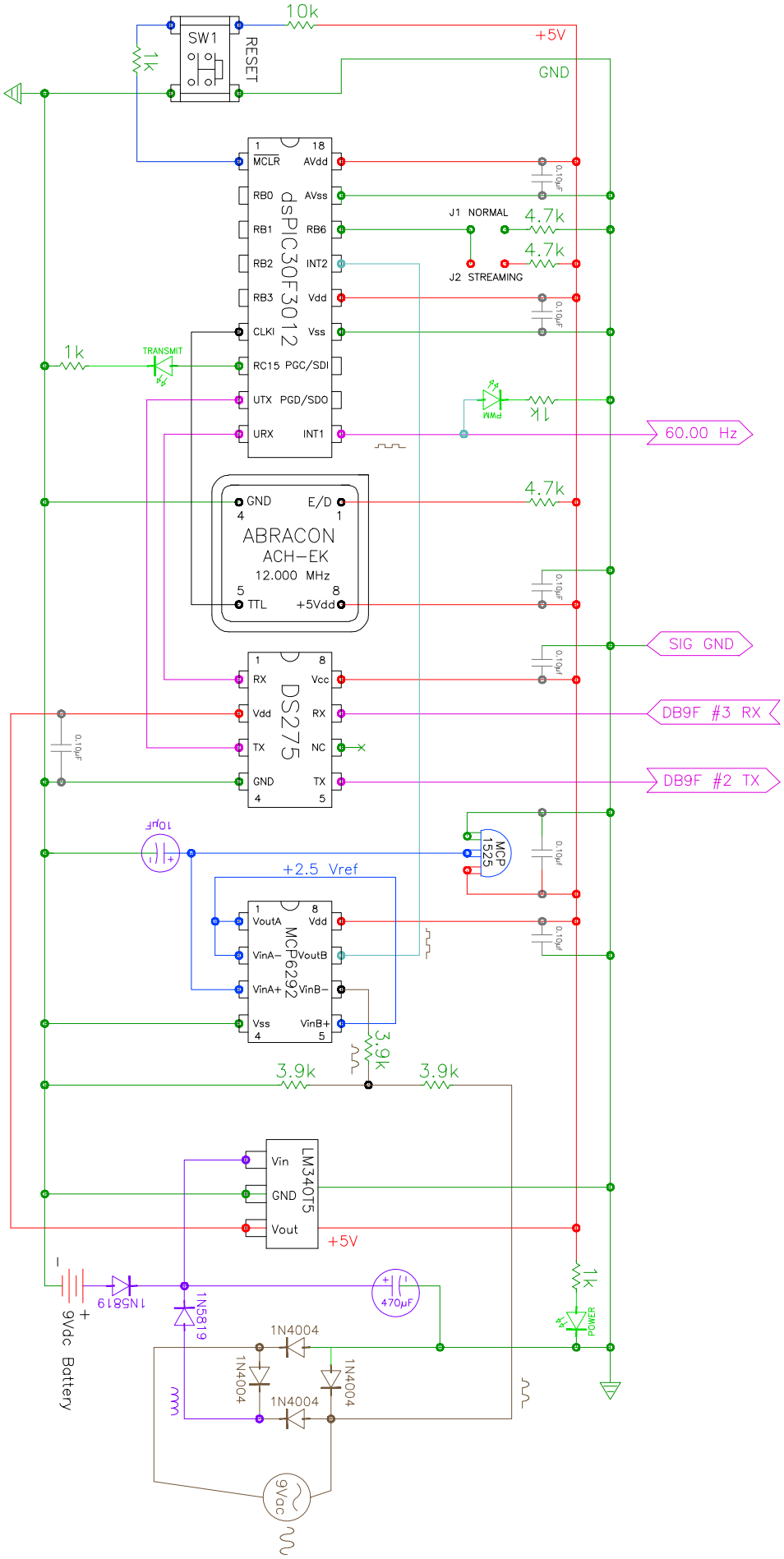
SW1
RESET
10k
1k
+5V
GND
dsPIC30F3012
MCLR
AVdd
RB0
AVss
RB1
RB6
RB2
INT2
RB3
Vdd
CLKI
Vss
RC15 PGC/SDI
UTX PGD/SDO
URX
INT1
0.10µF
J1 NORMAL
J2 STREAMING
4.7k
TRANSMIT
PWM
60.00 Hz
ABRACON
ACH-EK
12.000 MHz
GND
E/D
TTL
+5Vdd
SIG GND
DS275
RX
Vcc
Vdd
TX
NC
GND
DB9F #3 RX
DB9F #2 TX
10µF
MCP 1525
+2.5 Vref
MCP6292
VoutA
Vdd
VinA−
VoutB
VinA+
VinB−
Vss
VinB+
3.9k
LM340T5
Vin
GND
Vout
+5V
1N5819
470µF
POWER
1N4004
9Vac
9Vdc Battery